Convertible Top

Refer to Wiring Diagrams Cell 102, Convertible Top for schematic and connector information.

Special Tool(s)

ST1137-A	73 III Automotive Meter 105-R0057 or equivalent

Principles of Operation

The convertible top will only operate with the parking brake engaged and the ignition switch in the RUN position. When the parking brake is engaged, the raise and lower relay coils are grounded through the parking brake switch. The convertible top switch supplies power to the raise or lower relay coil when raise or lower is selected. This power energizes the coil causing the relay contacts to close which supplies battery power to the convertible top motor/pump assembly. The normal state of the relay is connected to ground. When the raise or lower relay is operating, the other relay remains in its normal state supplying the motor/pump ground.

Convertible Top Adjustment

The convertible top adjustments must be made by a qualified technician.

Inspection and Verification

1. Verify the customer concern by operating the system.
2. Visually inspect for obvious signs of mechanical or electrical damage.

Visual Inspection Chart

Mechanical	Electrical
• Convertible top brackets and frame • Hydraulic motor and pump • Hydraulic lift cylinders • Door and quarter window glass adjustment	• Central junction box (CJB) Fuse 20 (15A) • Battery junction box (BJB) circuit breaker CONV TOP (30A) • Wiring harness • Loose or corroded connections • Raise or lower relays • Parking brake switch • Convertible top switch

3. If an obvious cause for an observed or reported concern is found, correct the cause (if possible) before proceeding to the next step.
4. If the concern is not visually evident, verify the symptom and refer to the Symptom Chart.

Symptom Chart

SYMPTOM CHART

Condition	Possible Sources	Action
• The convertible top does not raise/lower	• Convertible top switch. • Central junction box (CJB) Fuse 20 (15A). • Parking brake switch. • Lower relay. • Raise relay. • Circuitry.	• GO to Pinpoint Test A.
• The convertible top hesitates/comes up uneven	• Convertible top adjustment. • Hydraulic lift cylinders. • Hydraulic system.	• GO to Pinpoint Test B.
• The convertible top does not raise or does not go up all the way	• Convertible top adjustment. • Hydraulic lift cylinders. • Hydraulic system.	• GO to Pinpoint Test C.
• The convertible top hydraulic system	• Convertible top adjustment. • Hydraulic lift cylinders. • Hydraulic motor/pump assembly. • Hydraulic system.	• GO to Pinpoint Test D.

PINPOINT TEST A: THE CONVERTIBLE TOP DOES NOT RAISE/LOWER

CONDITIONS	DETAILS/RESULTS/ACTIONS
A1 CHECK THE CONVERTIBLE TOP OPERATION	
NOTE: The parking brake must be applied for the convertible top system to operate.	
1	

	2 Depress the convertible top switch in RAISE and LOWER positions while listening for motor operation. • **Does the convertible top motor assembly operate in both directions?** → **Yes** GO to Pinpoint Test C. → **No** GO to A2.
A2 CHECK THE POWER SUPPLY TO THE CONVERTIBLE TOP SWITCH	
1 2 Convertible Top Switch C317 3 4 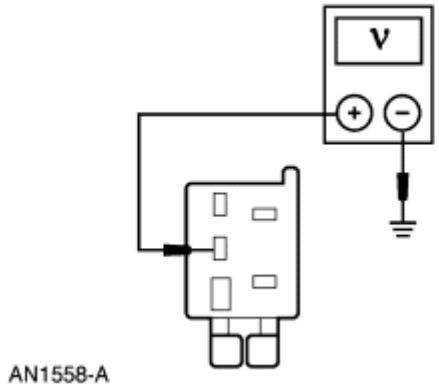 	4 Measure the voltage between convertible top switch C317 pin 4, circuit 296 (WH/PK), harness side and ground.

	• **Is the voltage greater than 10 volts?** → **Yes** GO to A3. → **No** REPAIR circuit 296 (WH/PK). TEST the system for normal operation.
A3 CHECK CIRCUIT 588 (VT) FOR AN OPEN	
1 2 Convertible Top Switch C317 3 Raise Relay C415 4 	
	5 Depress and hold the convertible top switch in the RAISE position.
6	6 Measure the voltage between raise relay C415 pin 85, circuit 588 (VT), harness side and ground.

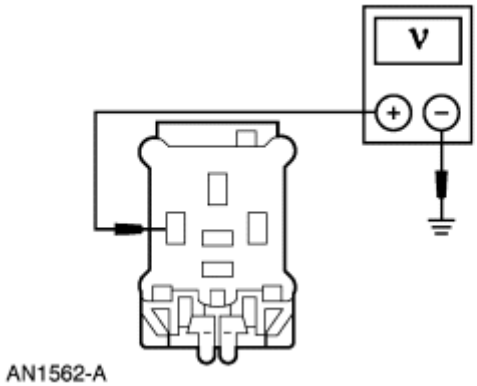

- **Is the voltage greater than 10 volts?**

→ **Yes**
GO to A4.

→ **No**
GO to A5.

A4 CHECK CIRCUIT 688 (GY/LB) FOR VOLTAGE

1

2

Lower Relay C414

3

4 Depress and hold the convertible top switch in the LOWER position.

5 Measure the voltage between lower relay C414 pin 85, circuit 688 (GY/LB), harness side and ground.

5

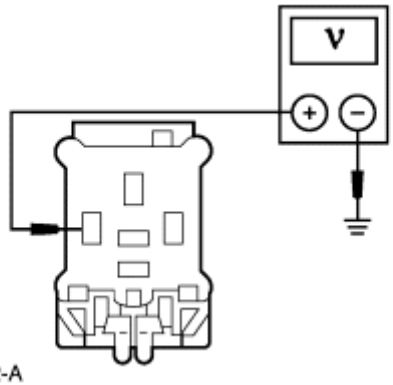

AN1562-A

- **Is the voltage greater than 10 volts?**

→ **Yes**
GO to A9.

→ **No**
GO to A8.

A5 CHECK CIRCUIT 588 (VT) FOR OPEN

1

2

Convertible Top Switch C317

3

3 Measure the resistance between convertible top switch C317 pin 3, circuit 588 (VT), harness side and raise relay C415 pin 85, circuit 588 (VT), harness side.

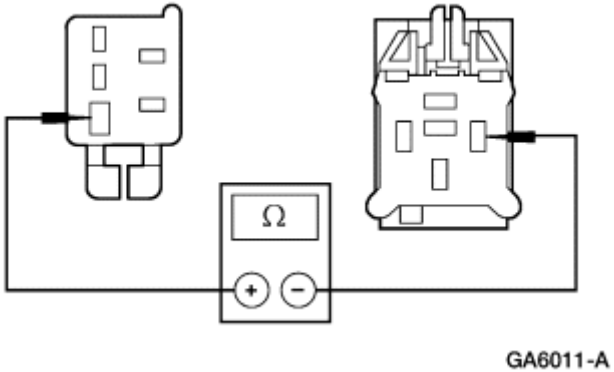	• **Is the resistance less than 5 ohms?** → **Yes** INSTALL a new convertible top switch. REFER to Convertible Top Switch in this section. TEST the system for normal operation. → **No** REPAIR Circuit 588 (VT). TEST the system for normal operation.
A6 CHECK CIRCUIT 688 (GY/LB) FOR OPEN	
1 2 3	3 Measure the resistance between convertible top switch C317 pin 5, circuit 688 (GY/LB), harness side and lower relay C414 pin 85, circuit 688 (GY/LB), harness side.

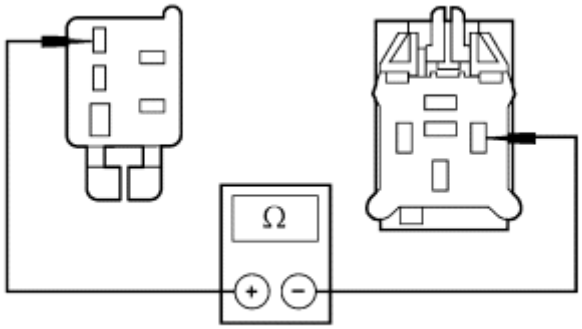

GA6012-A

- **Is the resistance less than 5 ohms?**

→ **Yes**
INSTALL a new convertible top switch. REFER to Convertible Top Switch in this section. TEST the system for normal operation.

→ **No**
REPAIR circuit 688 (GY/LB). TEST the system for normal operation.

A7 CHECK THE BATTERY SUPPLY TO THE RELAYS

1

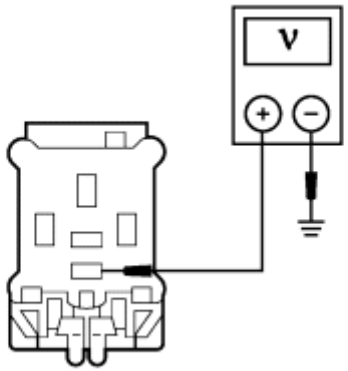

AN1563-A

1 Measure the voltage between raise relay C415 pin 87, circuit 170 (RD/LB), harness side and ground; and between lower relay C414 pin 87, circuit 170 (RD/LB), harness side and ground.

- **Are the voltages greater than 10 volts?**

	→ **Yes** GO to A8. → **No** REPAIR circuit 170 (RD/LB). TEST the system for normal operation.
A8 CHECK CIRCUIT 1205 (BK) FOR AN OPEN	
1 2 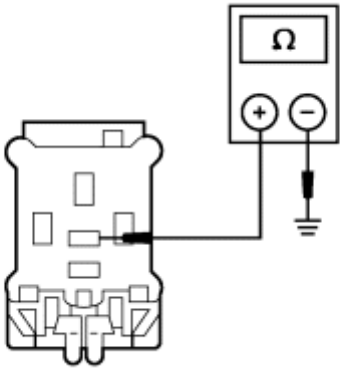 AN1565-A	2 Measure the resistance between raise relay C415 pin 87A, circuit 1205 (BK), harness side and ground; and between lower relay C414 pin 87A, circuit 1205 (BK), harness side and ground. • **Are the resistances greater than 10,000 ohms?** → **Yes** GO to A9. → **No** REPAIR the circuit. TEST the system for normal operation.
A9 CHECK FOR PARKING BRAKE GROUND	
1	1 Measure the resistance between raise relay C415 pin 86, circuit 977 (VT/WH), harness side and ground; and between lower relay C414 pin 86, circuit 977 (VT/WH), harness side and ground.

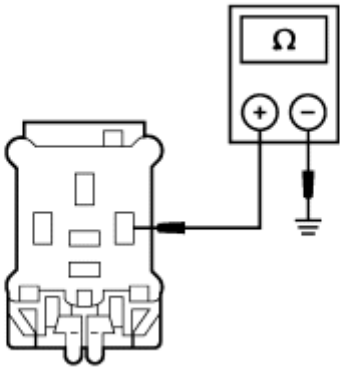

AN1566-A

- **Are the resistances less than 5 ohms?**

→ **Yes**
GO to A11.

→ **Yes**
GO to A10.

A10 CHECK THE PARKING BRAKE SWITCH

1

Parking Brake Switch C318

2

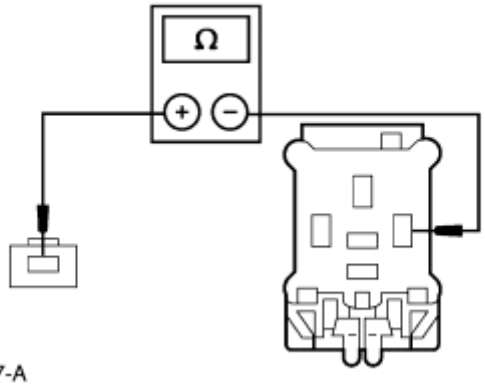

AN1567-A

2 Measure the resistance between raise relay C415 pin 86, circuit 977 (VT/WH), harness side and parking brake switch C318, circuit 22 (LB/BK), harness side; and between lower relay C414 pin 86, circuit 977 (VT/WH), harness side and parking brake switch C318, circuit 22 (LB/BK), harness side.

	• **Are the resistances less than 5 ohms?** → **Yes** INSTALL a new parking brake switch. REFER to Section 206-05. TEST the system for normal operation. → **No** REPAIR the circuit in question. TEST the system for normal operation.
A11 CHECK THE CONVERTIBLE TOP MOTOR LOWER CIRCUIT	
1 Raise Relay C415 2 Lower Relay C414 3 Convertible Top Motor C438 4 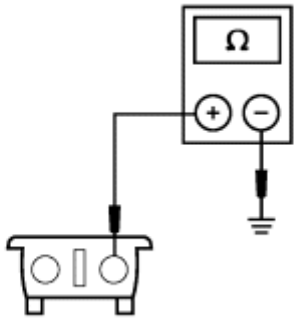 AN1568-A	4 Measure the resistance between convertible top motor C438, circuit 902 (YE), harness side and ground.

	• **Is the resistance less than 5 ohms?** → **Yes** GO to A13. → **No** GO to A12.
A12 CHECK CIRCUIT 902 (YE) FOR AN OPEN	
1 Lower Relay C414 2 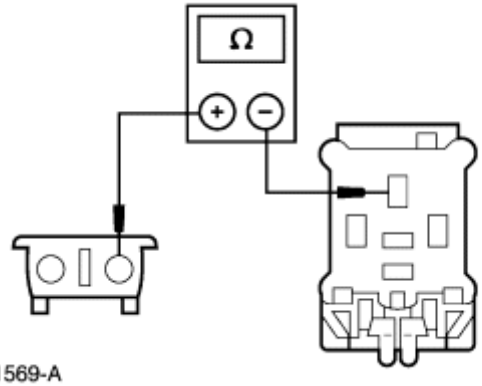 	2 Measure the resistance between lower relay C414 pin 30, circuit 902 (YE), harness side and convertible top motor C438, circuit 902 (YE), harness side. • **Is the resistance less than 5 ohms?** → **Yes** INSTALL a new lower relay. TEST the system for normal operation. → **No** REPAIR the circuit. TEST the system for normal operation.
A13 CHECK THE LOWER INPUT TO THE MOTOR	
1	

 2 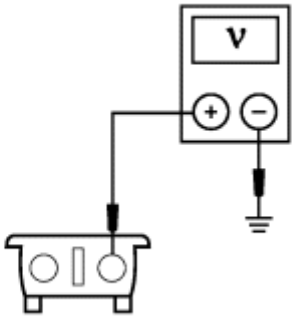 AN1570-A	2 Measure the voltage between convertible top motor C438, circuit 902 (YE), harness side and ground. 3 Depress and hold the convertible top switch in the LOWER position. • **Is the voltage greater than 10 volts?** → **Yes** GO to A14. → **No** INSTALL a new lower relay. TEST the system for normal operation.
A14 CHECK THE CONVERTIBLE TOP MOTOR RAISE CIRCUIT	
1 2	2 Measure the resistance between convertible top motor C438, circuit 903 (RD), harness side and ground.

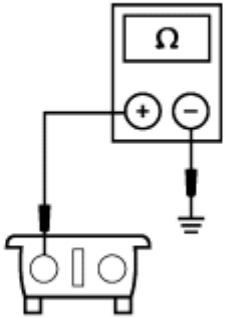

AN1571-A

- **Is the resistance less than 5 ohms?**

→ **Yes**
GO to A16.

→ **No**
GO to A15.

A15 CHECK CIRCUIT 903 (RD) FOR AN OPEN

1

Raise Relay C415

2

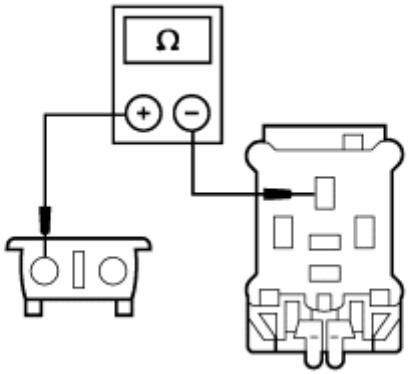

AN1572-A

2 Measure the resistance between raise relay C415 pin 30, circuit 903 (RD), harness side and convertible top motor C438, circuit 903 (RD), harness side.

	• **Is the resistance less than 5 ohms?** → **Yes** INSTALL a new raise relay. TEST the system for normal operation. → **No** REPAIR the circuit. TEST the system for normal operation.
A16 CHECK THE RAISE INPUT TO THE MOTOR	
1 3 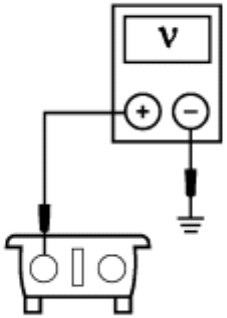 AN1573-A	2 Depress and hold the convertible top switch in the RAISE position. 3 Measure the voltage between convertible top motor C438, circuit 903 (RD), harness side and ground. • **Is the voltage greater than 10 volts?** → **Yes** INSTALL a new convertible top motor; REFER to Hydraulic System, Lift Cylinder and Motor in this section. TEST the system for normal operation. → **No** INSTALL a new raise relay. TEST the system for normal operation.

PINPOINT TEST B: THE CONVERTIBLE TOP HESITATES/COMES UP UNEVEN

CONDITIONS	DETAILS/RESULTS/ACTIONS
B1 CHECK THE CONVERTIBLE TOP UP/DOWN OPERATION	
NOTE: The parking brake must be applied for the convertible top system to operate.	
1	2 Actuate the convertible top switch to the LOWER and RAISE positions. • **Did the convertible top operate to the full down and full up position without hesitating?** → **Yes** ADJUST the convertible top linkage. TEST the system for normal operation. → **No** GO to B2.
B2 CHECK THE MOTOR OPERATION	
	1 Gain access to the convertible top motor/pump assembly. 2 Operate the convertible top to the LOWER and RAISE positions while listening to the motor. • **Did the motor stop and then continue at any time?** → **Yes** GO to Pinpoint Test A. → **No** GO to B3.
B3 CHECK THE CONVERTIBLE TOP LINKAGE	
	1 Operate the convertible top to the LOWER and RAISE positions while observing the convertible top linkage. • **Did the linkage operate smoothly without binding?** → **Yes** GO to Pinpoint Test D.

	→ **No** ADJUST the convertible top linkage. TEST the system for normal operation.

PINPOINT TEST C: THE CONVERTIBLE TOP DOES NOT RAISE OR DOES NOT GO UP ALL THE WAY

CONDITIONS	DETAILS/RESULTS/ACTIONS
C1 CHECK THE CONVERTIBLE TOP OPERATION	
NOTE: The parking brake must be applied for the convertible top system to operate.	
1	2 Actuate the convertible top switch to the RAISE position. • **Did the motor operate?** → **Yes** GO to C2. → **No** GO to Pinpoint Test A.
C2 CHECK THE CONVERTIBLE TOP LINKAGE	
	1 Operate the convertible top to the LOWER and RAISE positions while observing the convertible top linkage. • **Did the linkage bind and prevent the convertible top from raising?** → **Yes** ADJUST the convertible top linkage. TEST the system for normal operation. → **No** GO to Pinpoint Test D.

PINPOINT TEST D: THE CONVERTIBLE TOP HYDRAULIC SYSTEM

CONDITIONS	DETAILS/RESULTS/ACTIONS

D1 CHECK THE FLUID LEVEL	
NOTE: The fluid level should be even with the bottom of the filler plug hole. **NOTE:** Place an absorbent cloth below the filler plug when checking the fluid level.	
	1 Remove the filler plug and check the fluid level. • **Is the fluid level OK?** → **Yes** GO to D3. → **No** GO to D2.
D2 CHECK THE HYDRAULIC SYSTEM FOR LEAKS	
	1 Inspect all fittings and hoses for leaks. • **Are any leaks noticed?** → **Yes** REPAIR the leaking fittings or INSTALL new hoses as necessary. TEST the system for normal operation. → **No** GO to D3.
D3 BLEED THE HYDRAULIC SYSTEM	
	1 Bleed the hydraulic system. Refer to System Bleeding in this section. • **Does the system operate correctly after bleeding?** → **Yes** OPERATE the convertible top up and down three times. INSPECT the hydraulic system for leaks or loss of fluid. REPAIR as necessary if loss of fluid is detected. → **No** GO to D4.
D4 CHECK THE CONVERTIBLE TOP	
	1 Remove the hydraulic system from the vehicle. Refer to Hydraulic System, Lift Cylinder and Motor in this section.

	2 Operate the convertible top assembly up and down manually. • **Does the convertible top bind?** → **Yes** ADJUST the convertible top. INSTALL the hydraulic system; REFER to Hydraulic System, Lift Cylinder and Motor in this section. TEST the system for normal operation. → **No** GO to D5.
D5 CHECK THE HYDRAULIC SYSTEM OUT OF THE VEHICLE	
	1 Bleed the hydraulic system. Refer to System Bleeding in this section. • **Does the system operate correctly after bleeding?** → **Yes** CHECK all fittings and hoses for leaks. REPAIR as necessary if loss of fluid is detected. INSTALL the hydraulic system; REFER to Hydraulic System, Lift Cylinder and Motor in this section. TEST the system for normal operation. → **No** GO to D6.
D6 CHECK THE LIFT CYLINDERS	
	1 Operate the hydraulic system using a 12 volt power source. • **Did the lift cylinders extend and retract?** → **Yes** INSTALL a new motor/pump assembly. REFER to Hydraulic System, Lift Cylinder and Motor in this section. TEST the system for normal operation. → **No** INSTALL a new lift cylinder. REFER to Hydraulic System, Lift Cylinder and Motor in this section. TEST the system for normal operation.