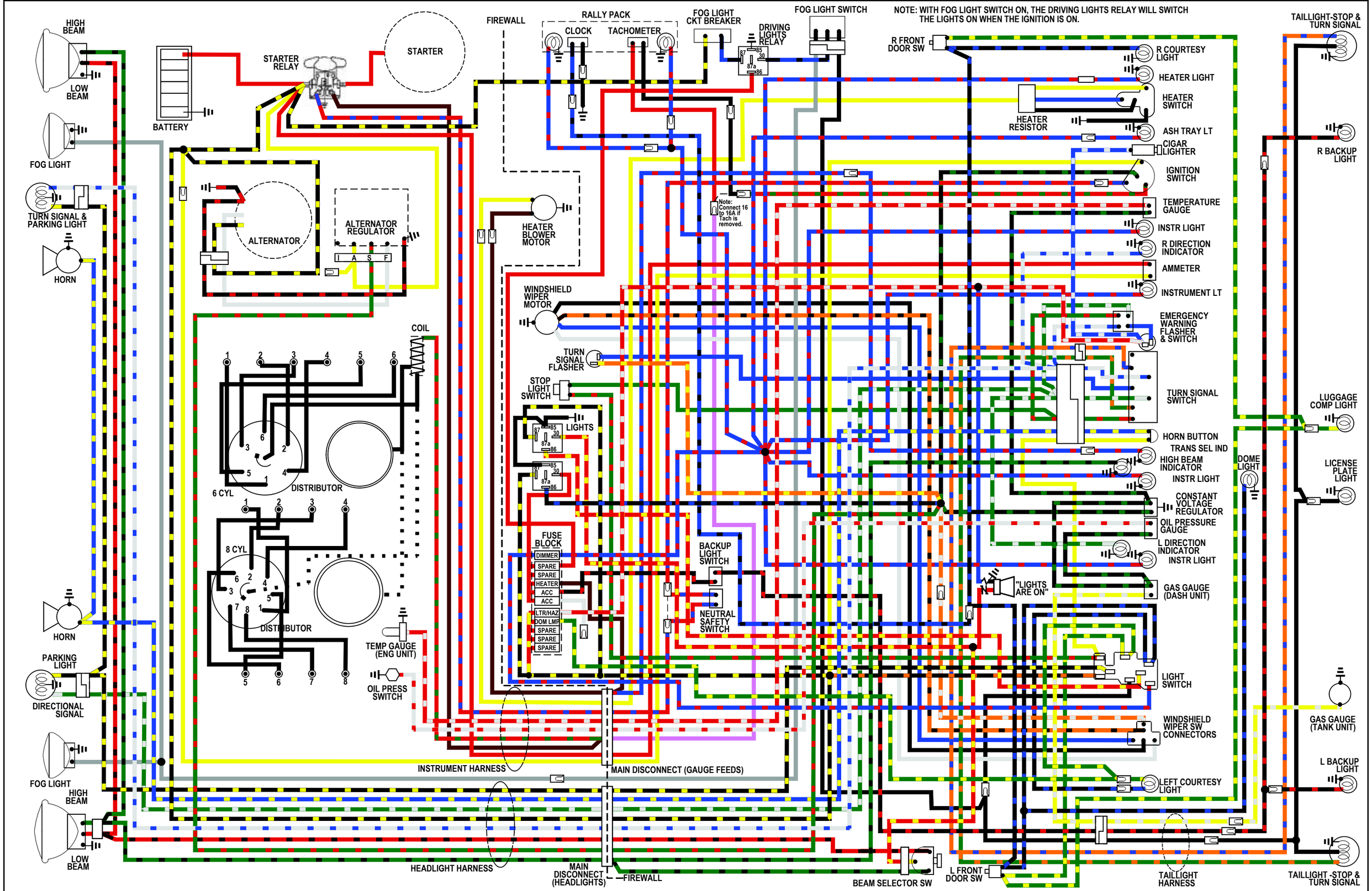

Report Errors or Omissions to gwflew@gmail.com

1966 MUSTANG CIRCUIT DIAGRAM (W/ PREMIUM FUSE BOX AND RELAYS)

NOTE: "LIGHTS ARE ON" SHOULD ACTIVATE WHEN THE IGNITION IS OFF AND THE LIGHT SWITCH IS ON.

Colorization by: www.clanmcmuffin.com/Mustang.html
rev 02/06/2021

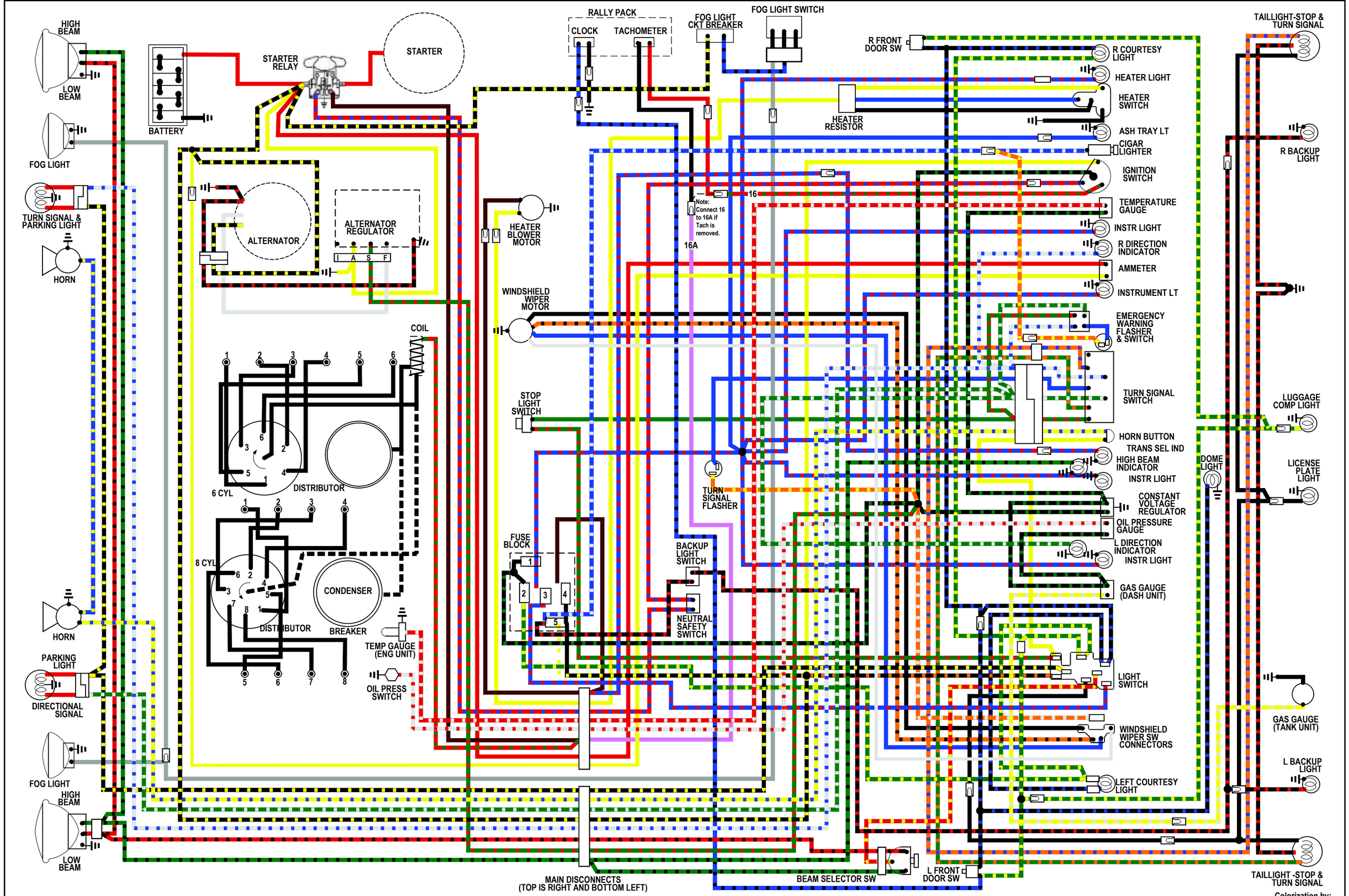

Report Errors or Omissions to gwflew@gmail.com

1966 MUSTANG CIRCUIT DIAGRAM (CLASSIC)

Colorization by:
www.clanmcmuffin.com/Mustang.html
rev 02/05/2022

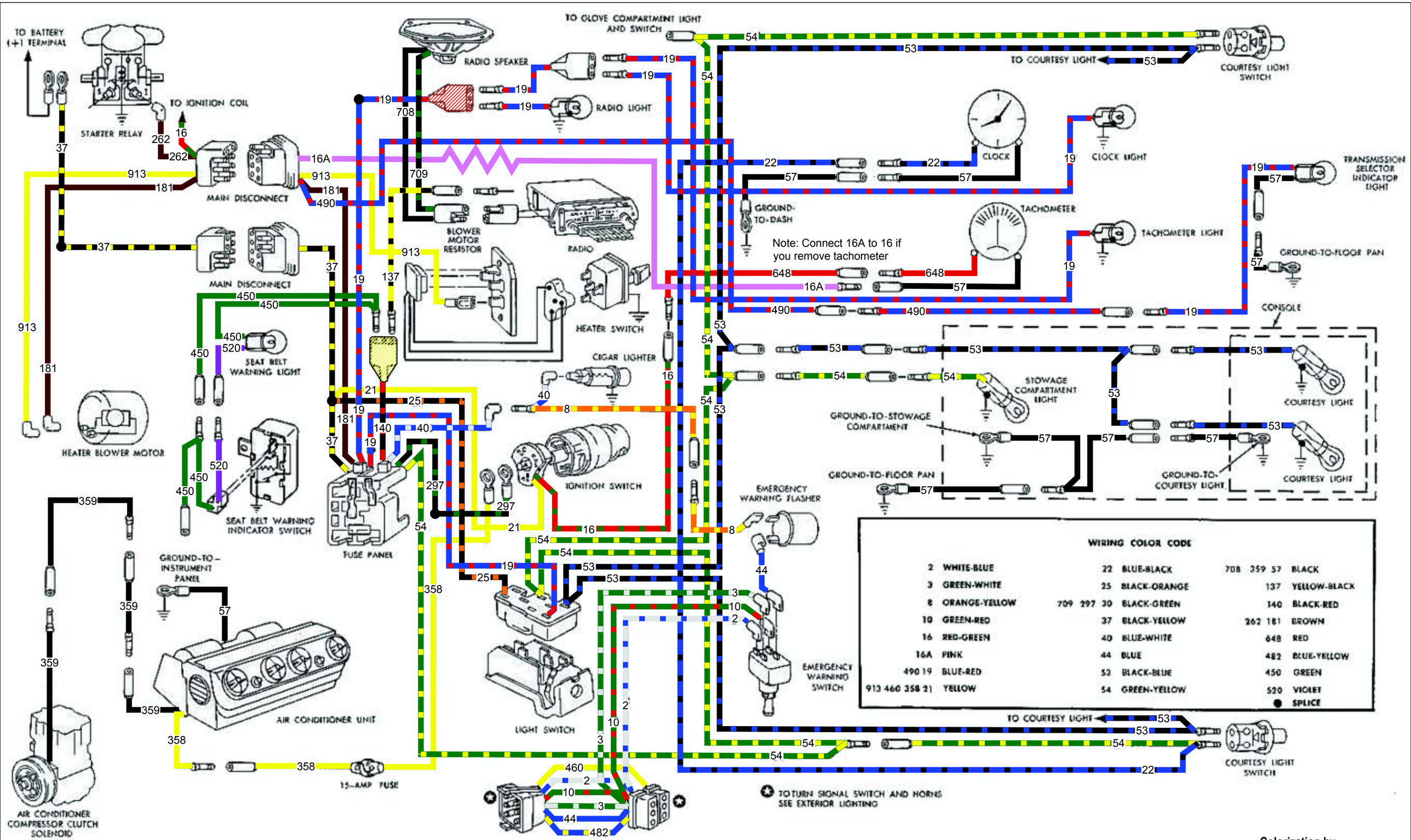

1966 MUSTANG ACCESSORIES

Colorization by
www.clanmcmuffin.com/Mustang.html

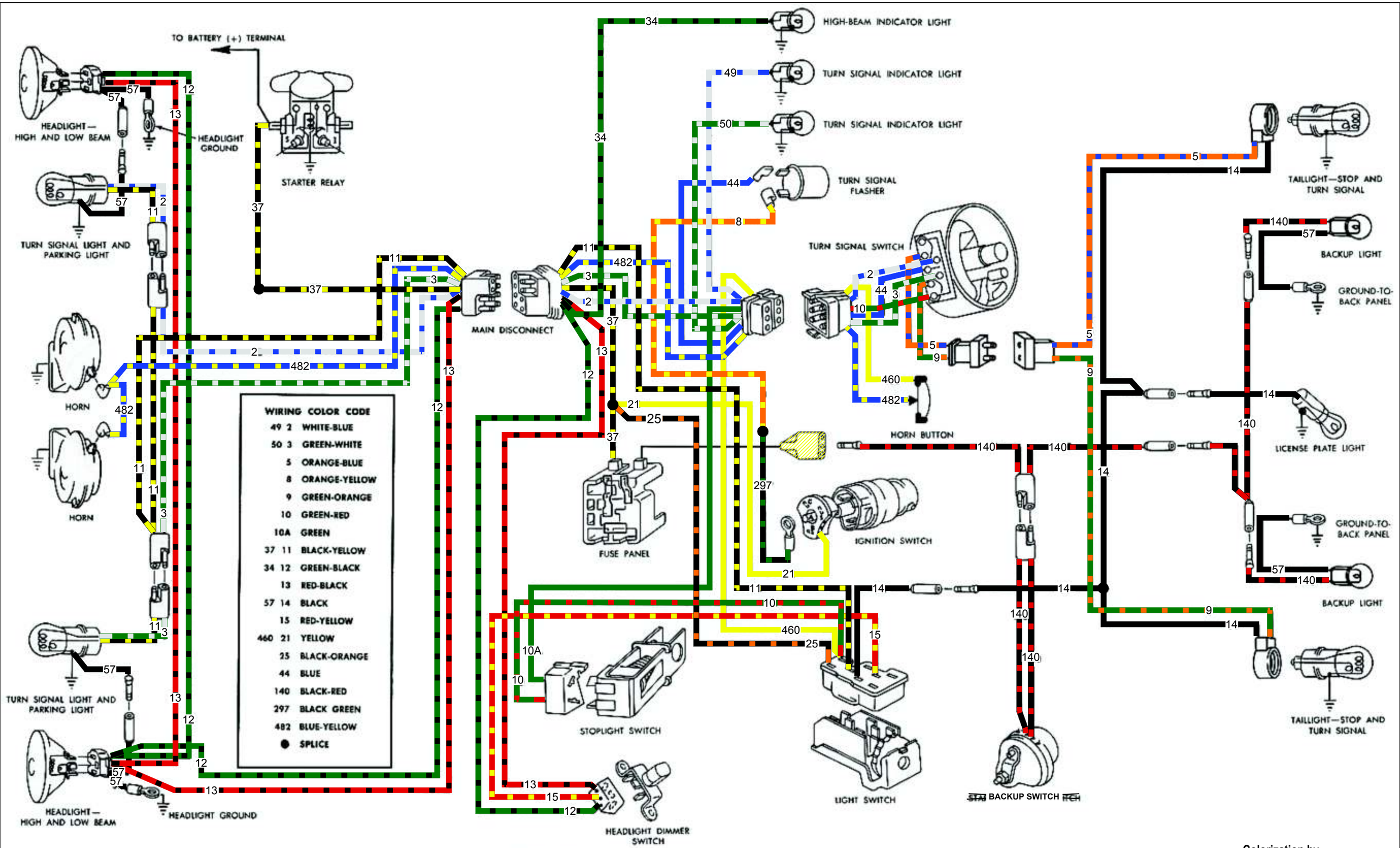

1966 MUSTANG EXTERIOR LIGHTING, TURN SIGNALS AND HORNS

Colorization by
www.clanmcmuffin.com/Mustang.html

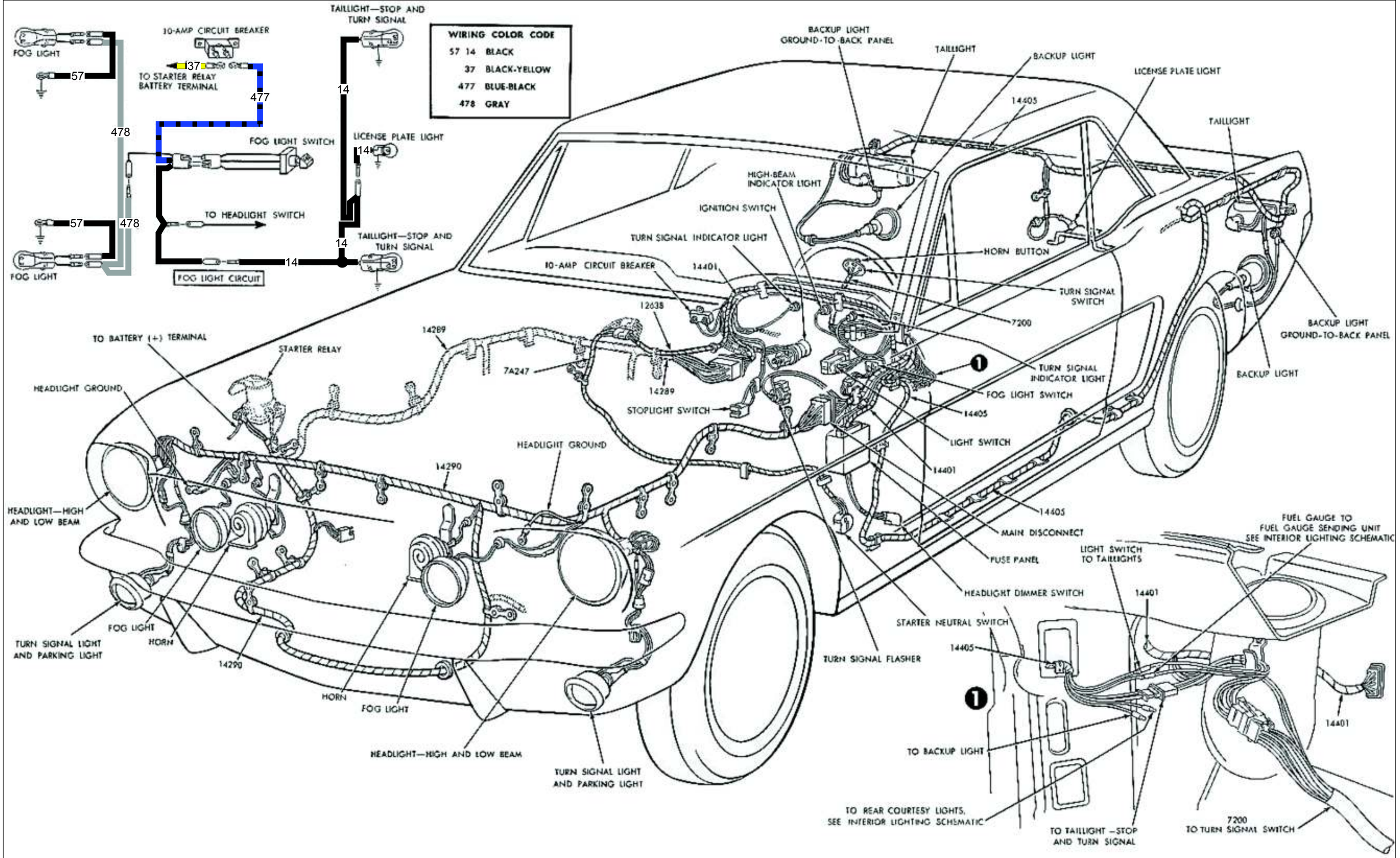

1966 MUSTANG EXTERIOR LIGHTING, TURN SIGNALS AND HORNS

Colorization by
www.clanmcmuffin.com/Mustang.html

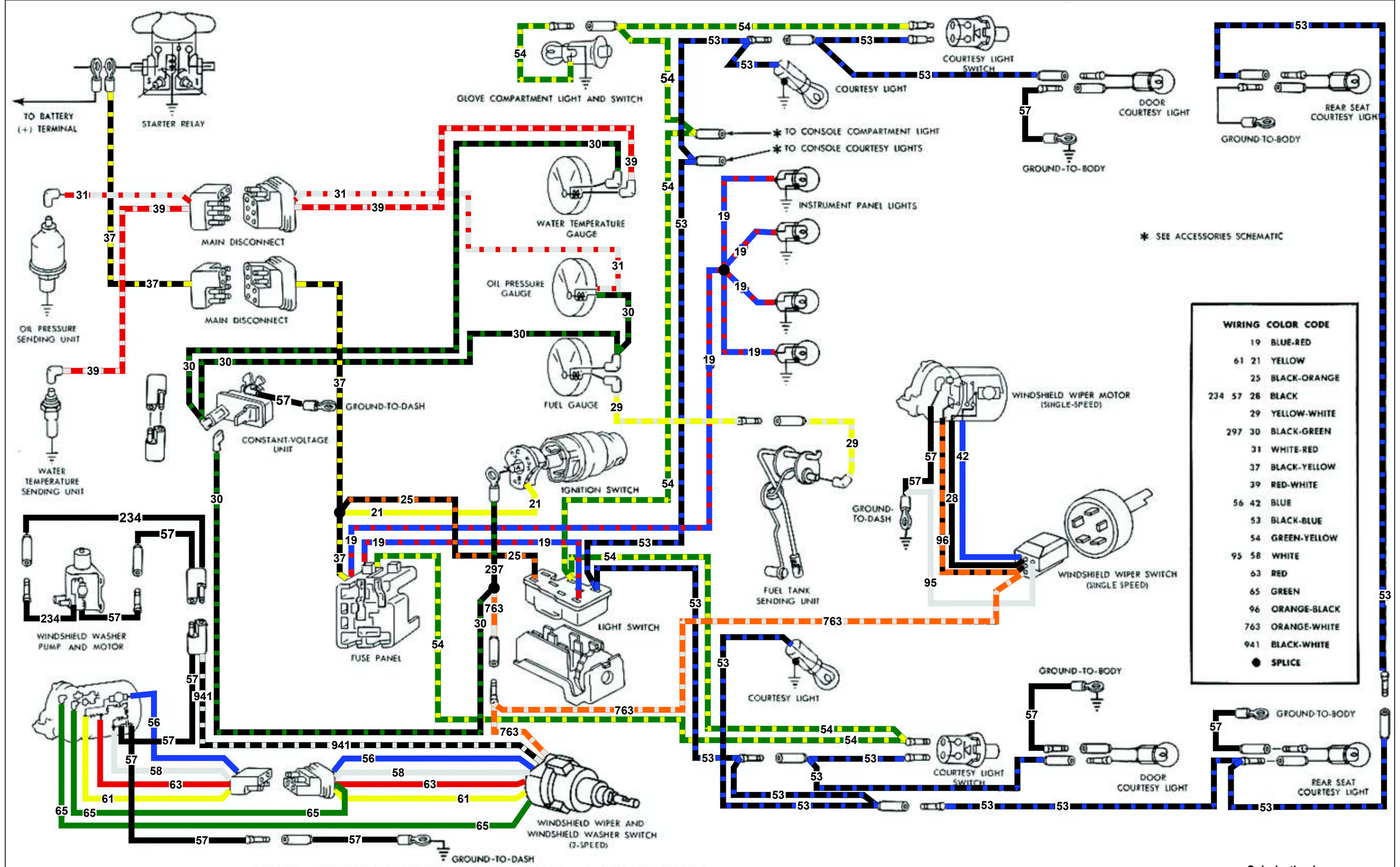

1966 MUSTANG INTERIOR LIGHTING, WINDSHIELD WIPERS AND GAUGES

Colorization by
www.clanmcmuffin.com/Mustang.html

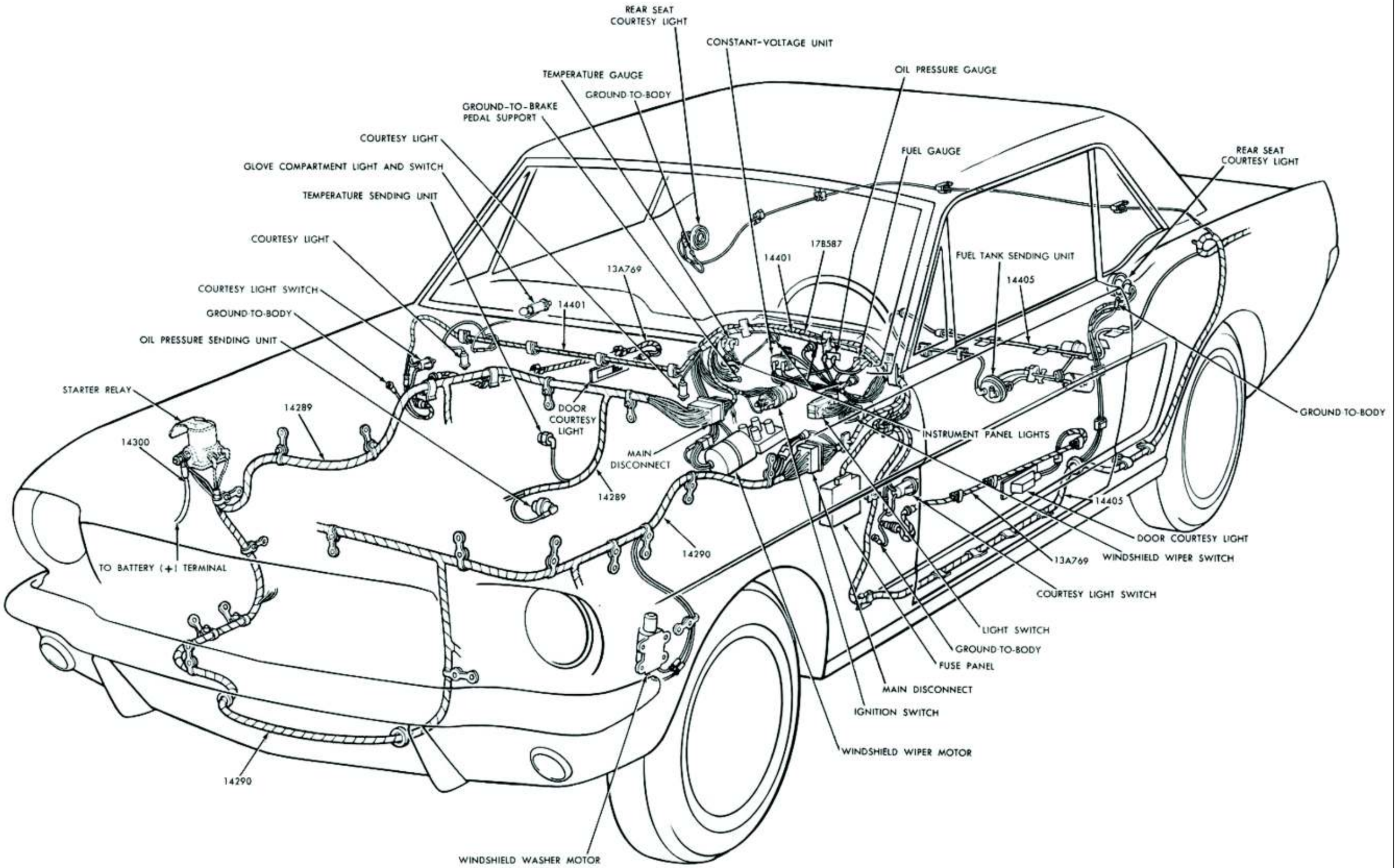

1966 MUSTANG INTERIOR LIGHTS, WINDSHIELD WIPER AND GAUGES

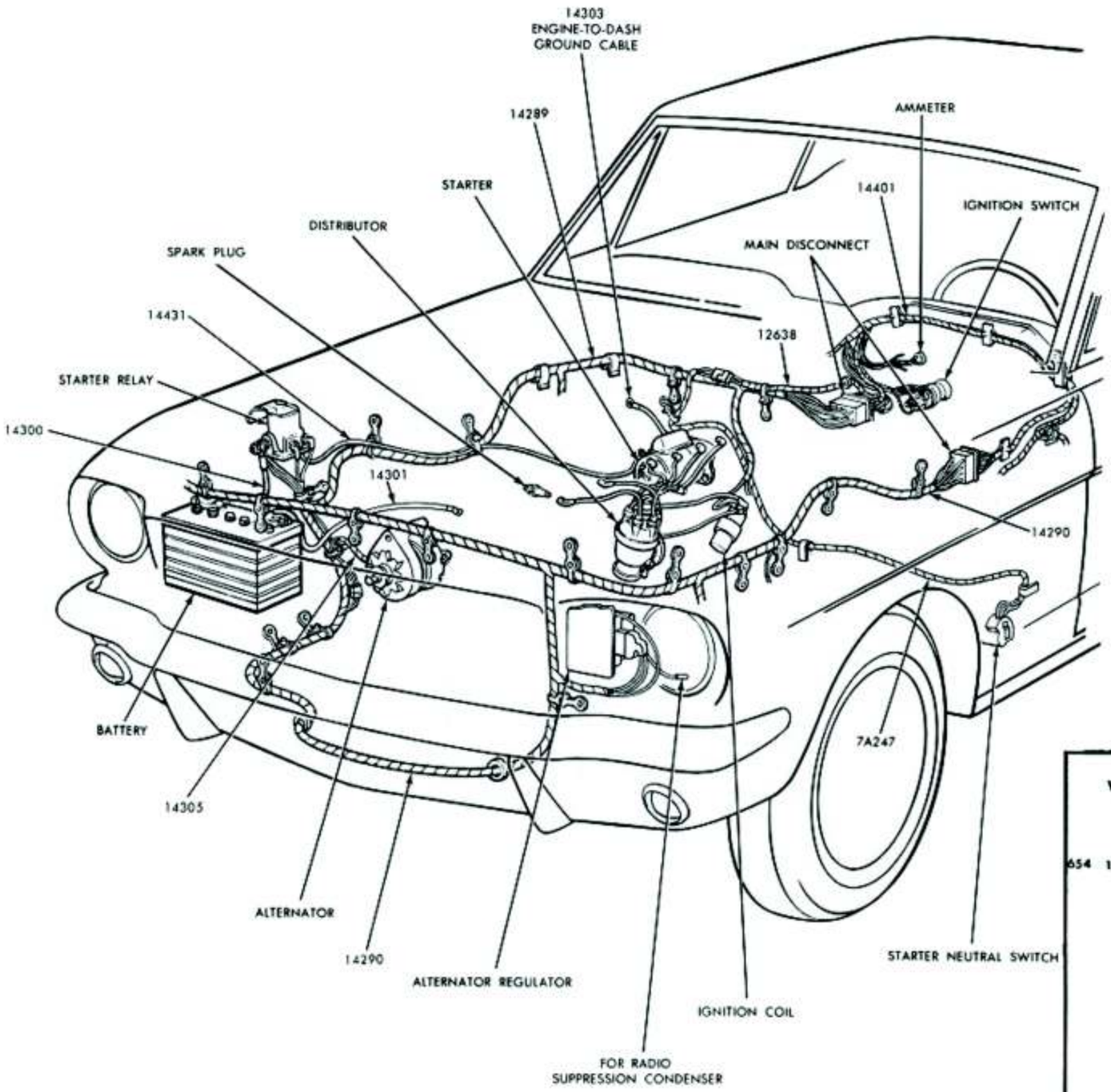

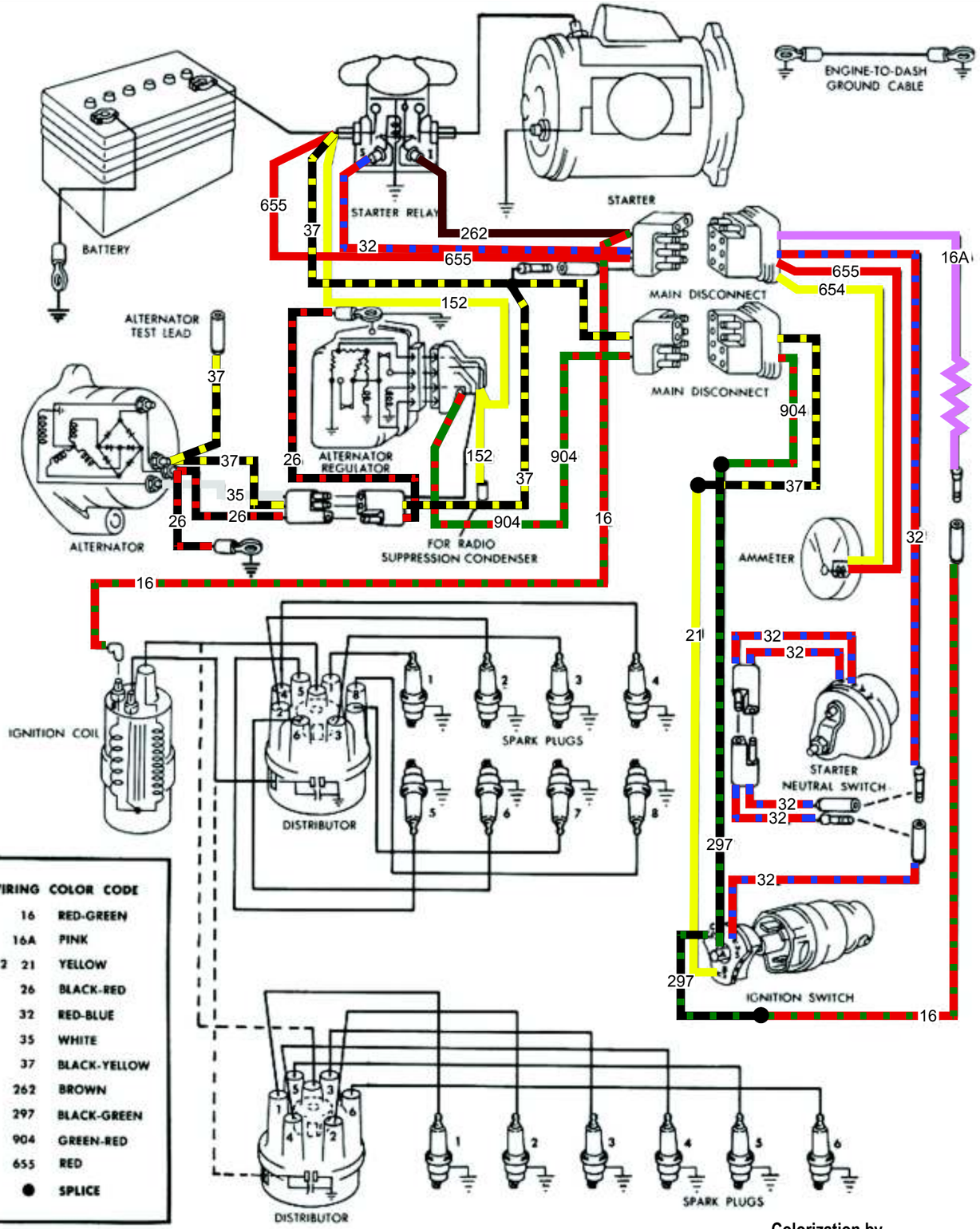

WIRING COLOR CODE	
16	RED-GREEN
16A	PINK
654 152 21	YELLOW
26	BLACK-RED
32	RED-BLUE
35	WHITE
37	BLACK-YELLOW
262	BROWN
297	BLACK-GREEN
904	GREEN-RED
655	RED
●	SPLICE

1966 MUSTANG IGNITION, STARTING AND CHARGING

Colorization by
www.clanmcmuffin.com/Mustang.html

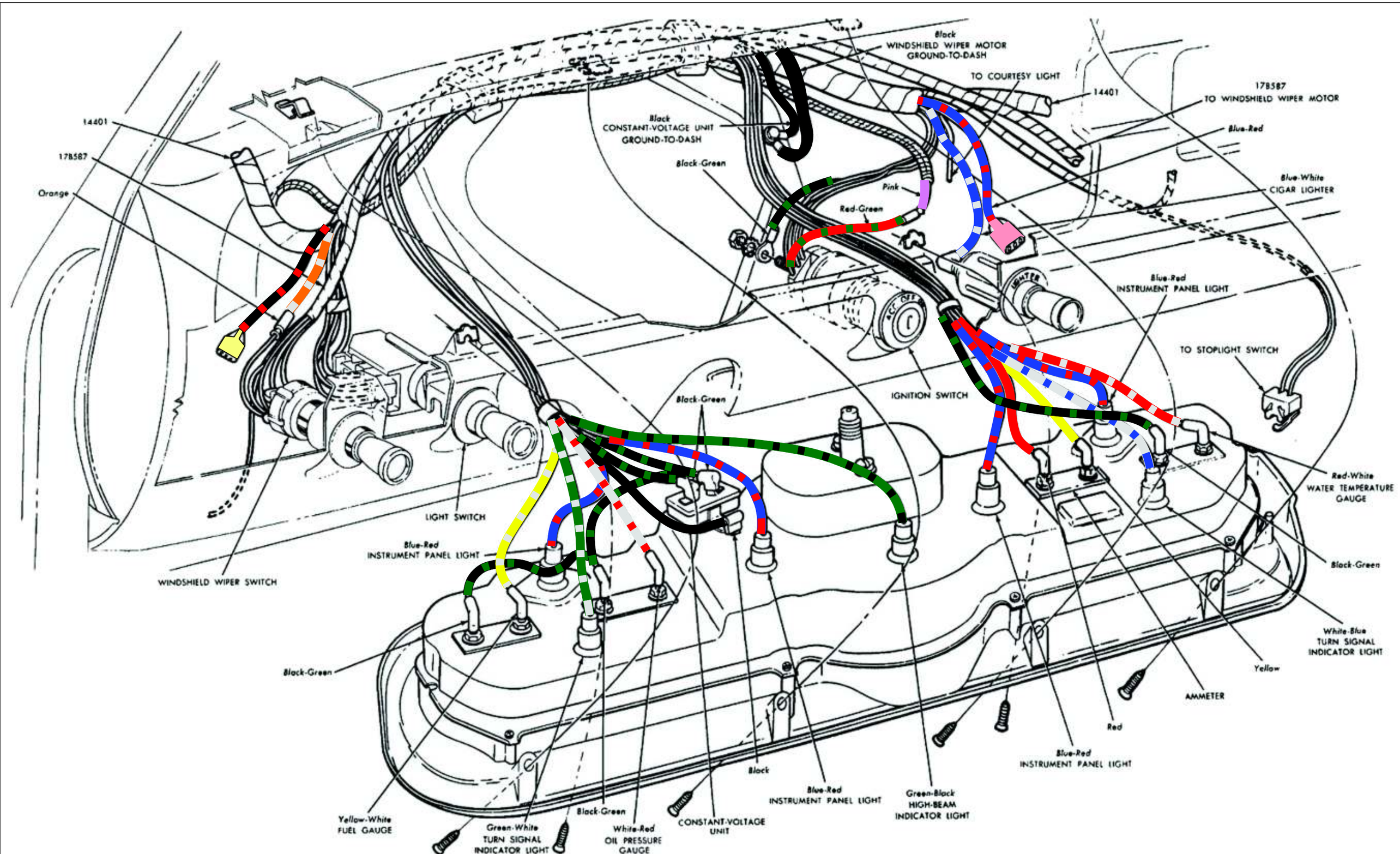

1966 MUSTANG INSTRUMENT PANEL

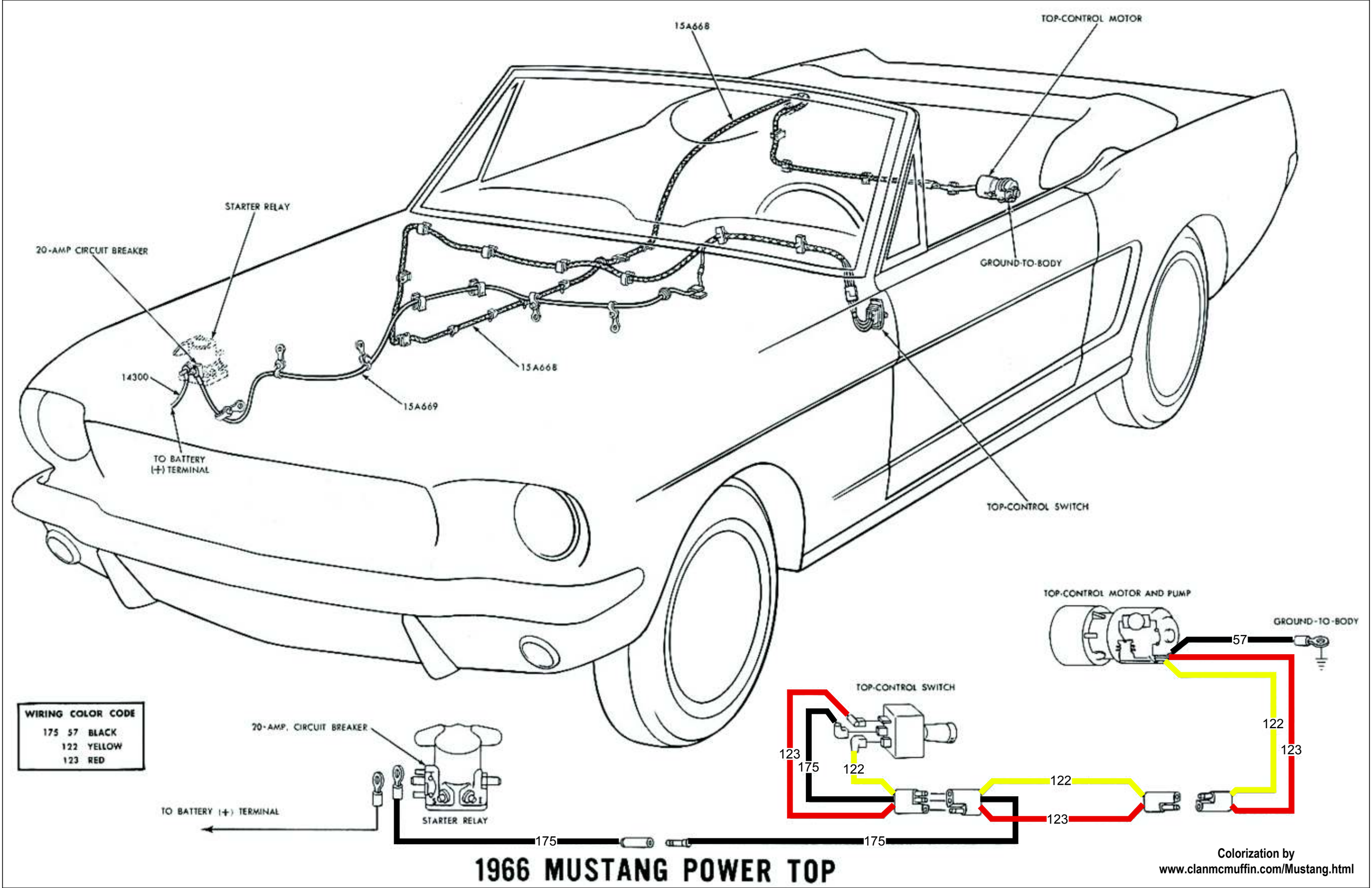

1966 MUSTANG POWER TOP

Colorization by
www.clanmcmuffin.com/Mustang.html

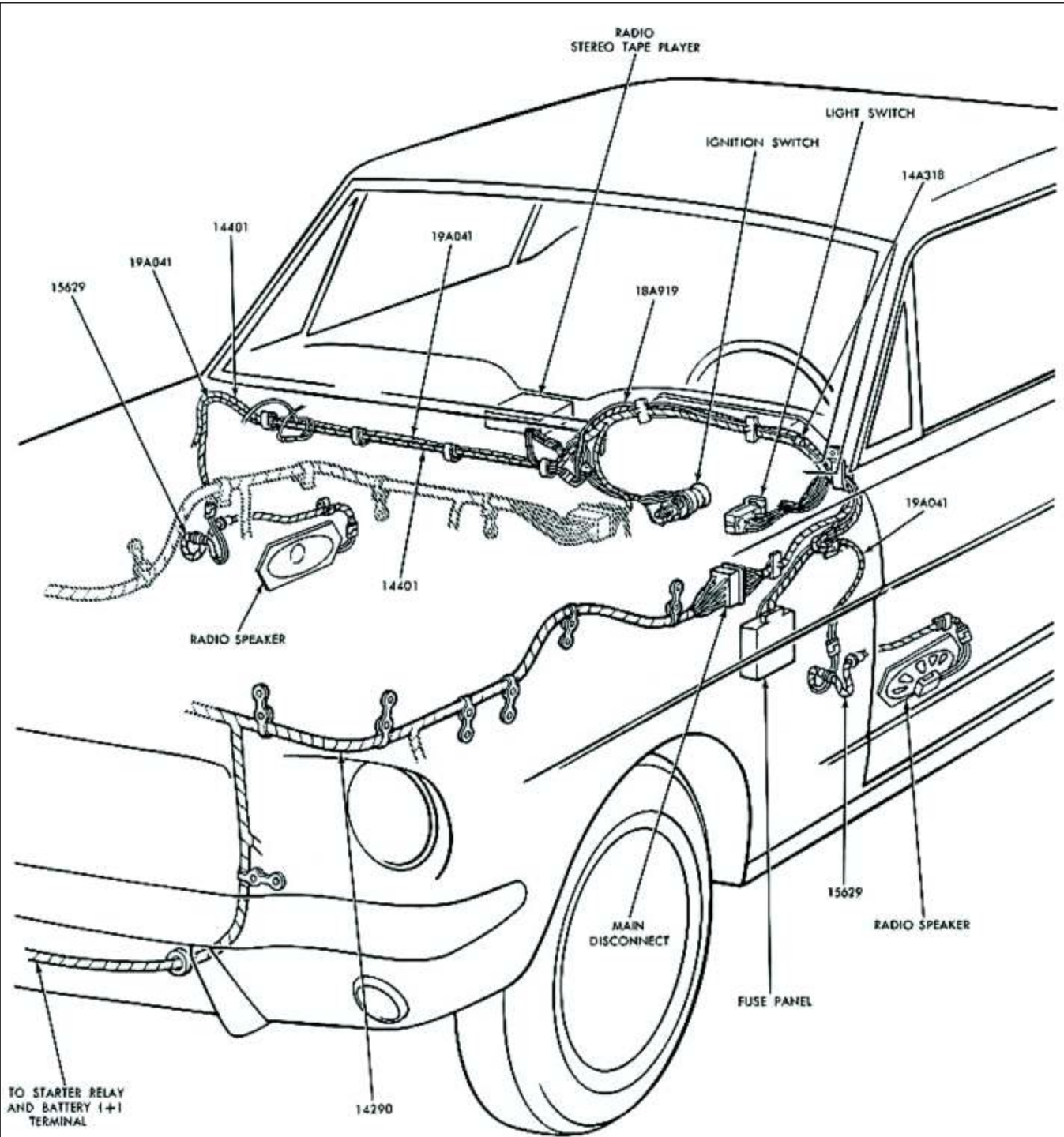

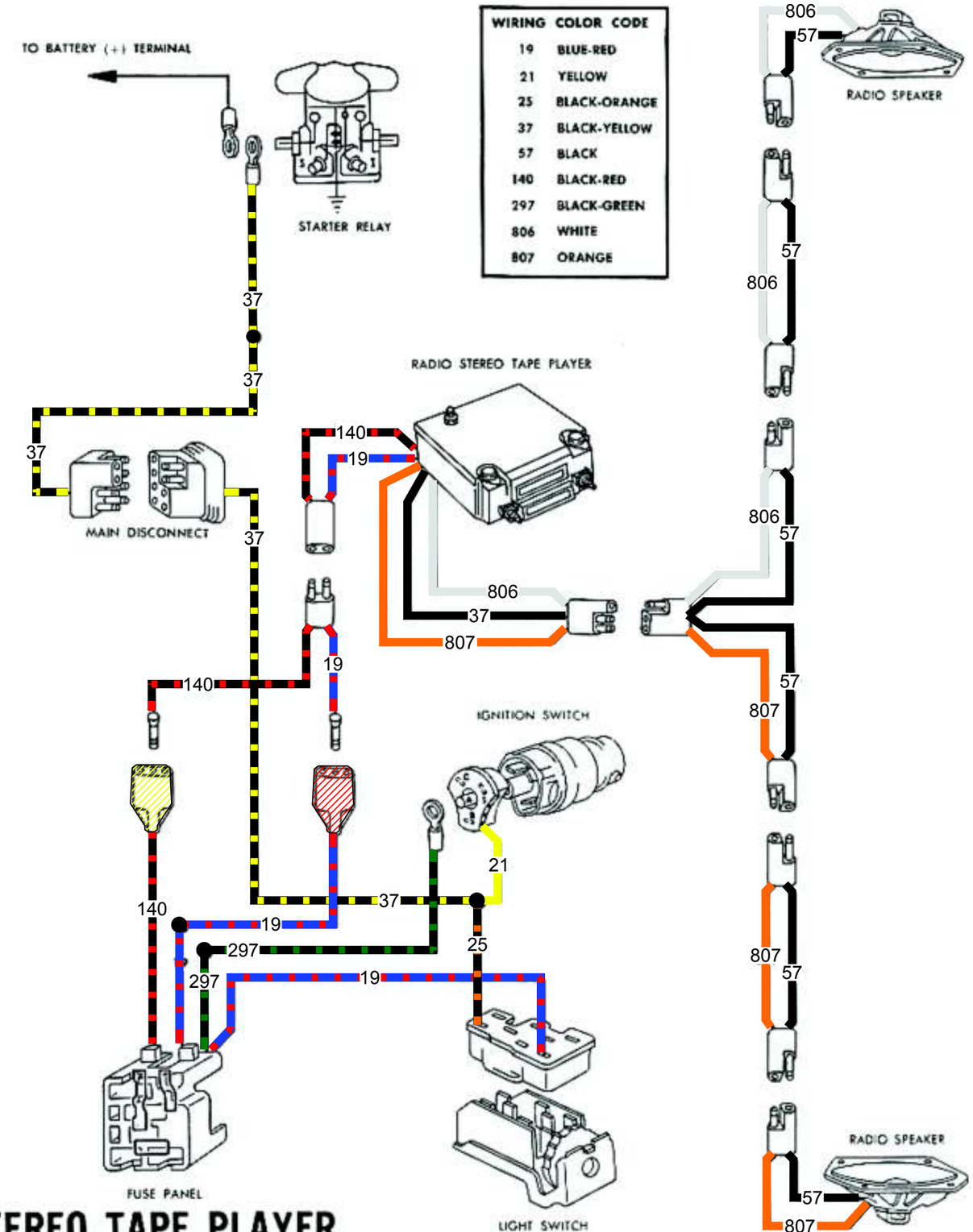

Colorization by
www.clanmcmuffin.com/Mustang.html

1966 MUSTANG RADIO STEREO TAPE PLAYER

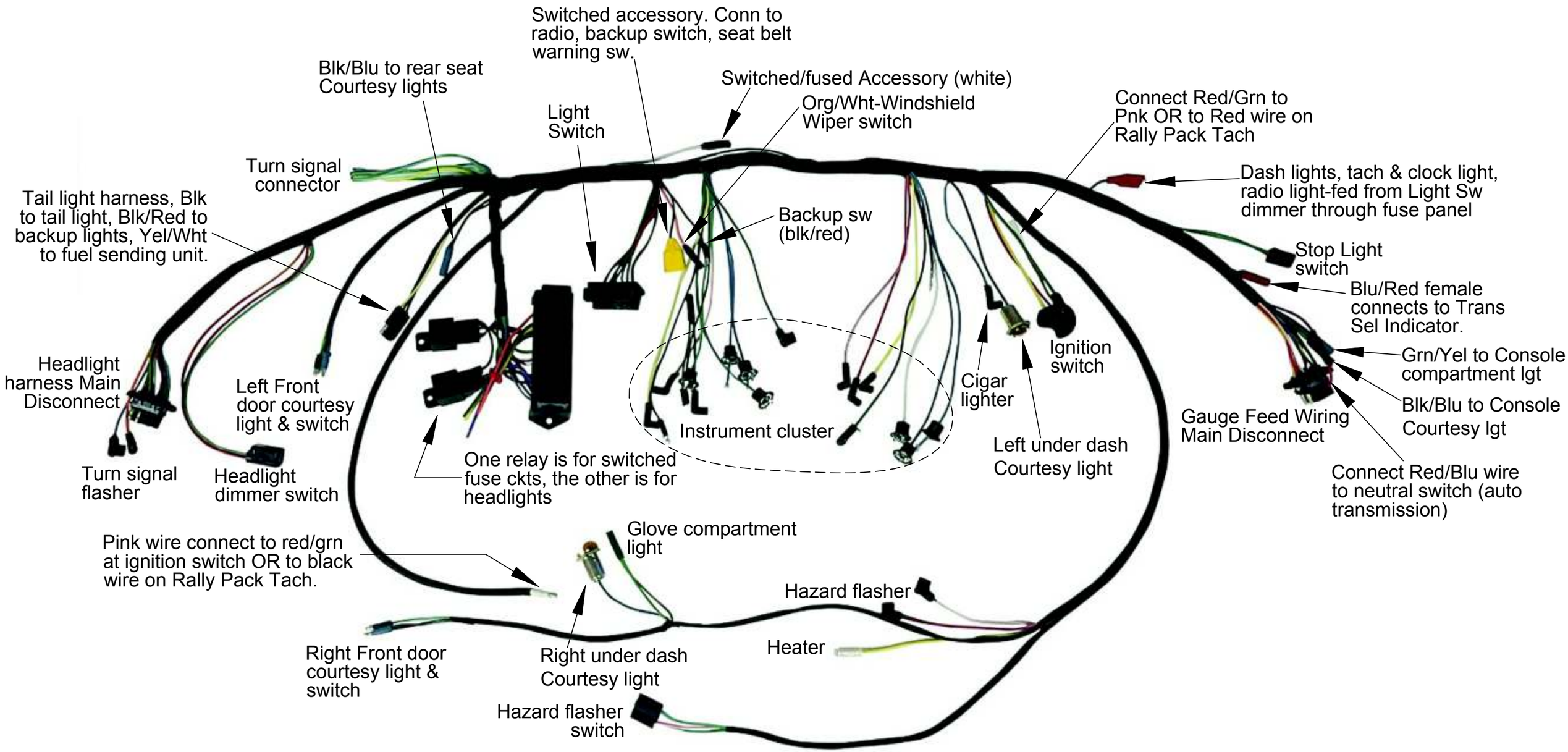

66 Mustang Harness with Premium Fuse Box & Relays

www.clanmcmuffin.com/Mustang.html
6/25/2018

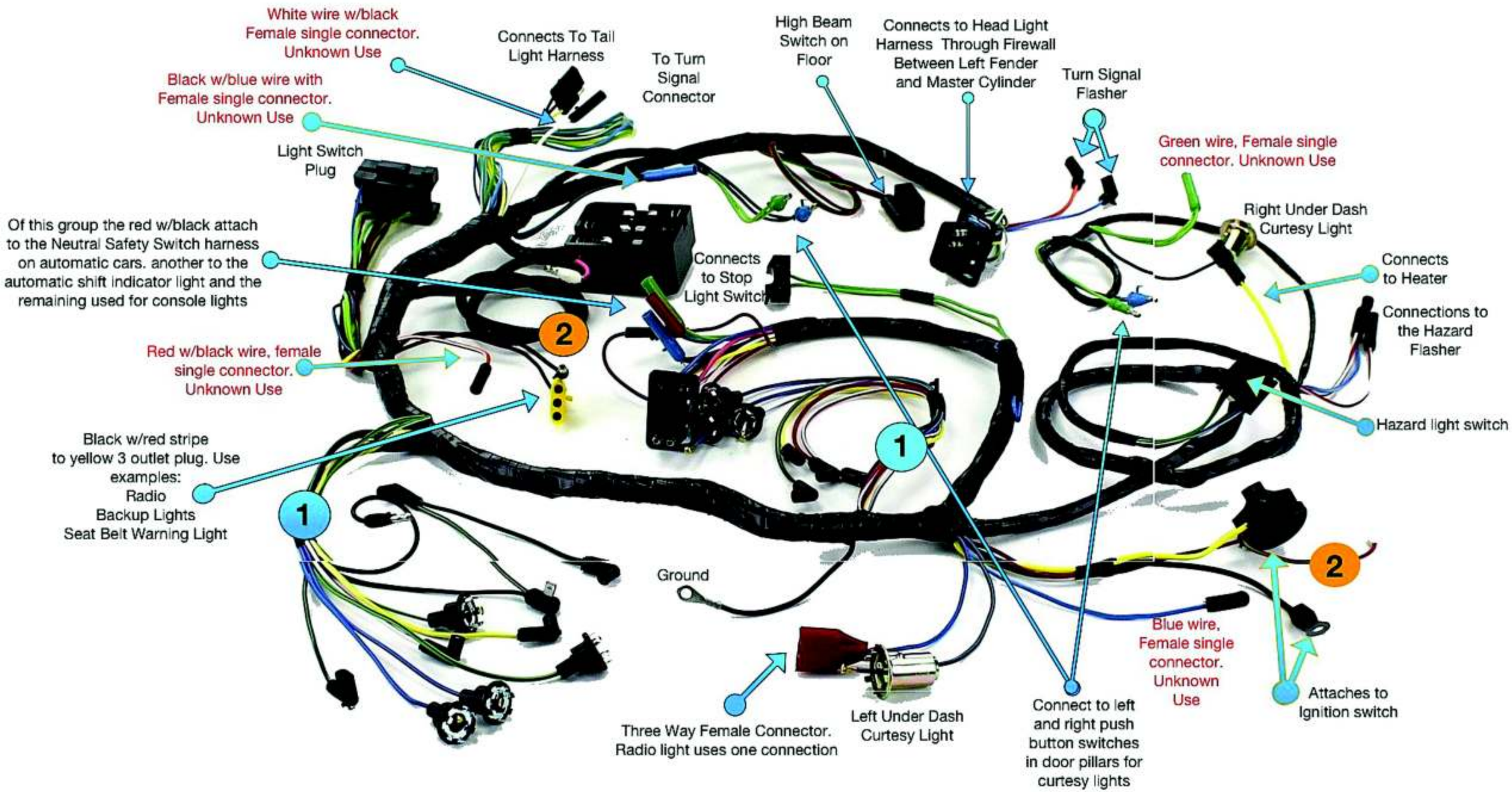

1 Wires in these groupings attached to the instrument cluster. See Instrument Panel Illustration for guide.

2 The coil of wire (#2 on left) is layed acrossthe harness to connect to the red w/green white tipped female plug from the ignition switch plug.

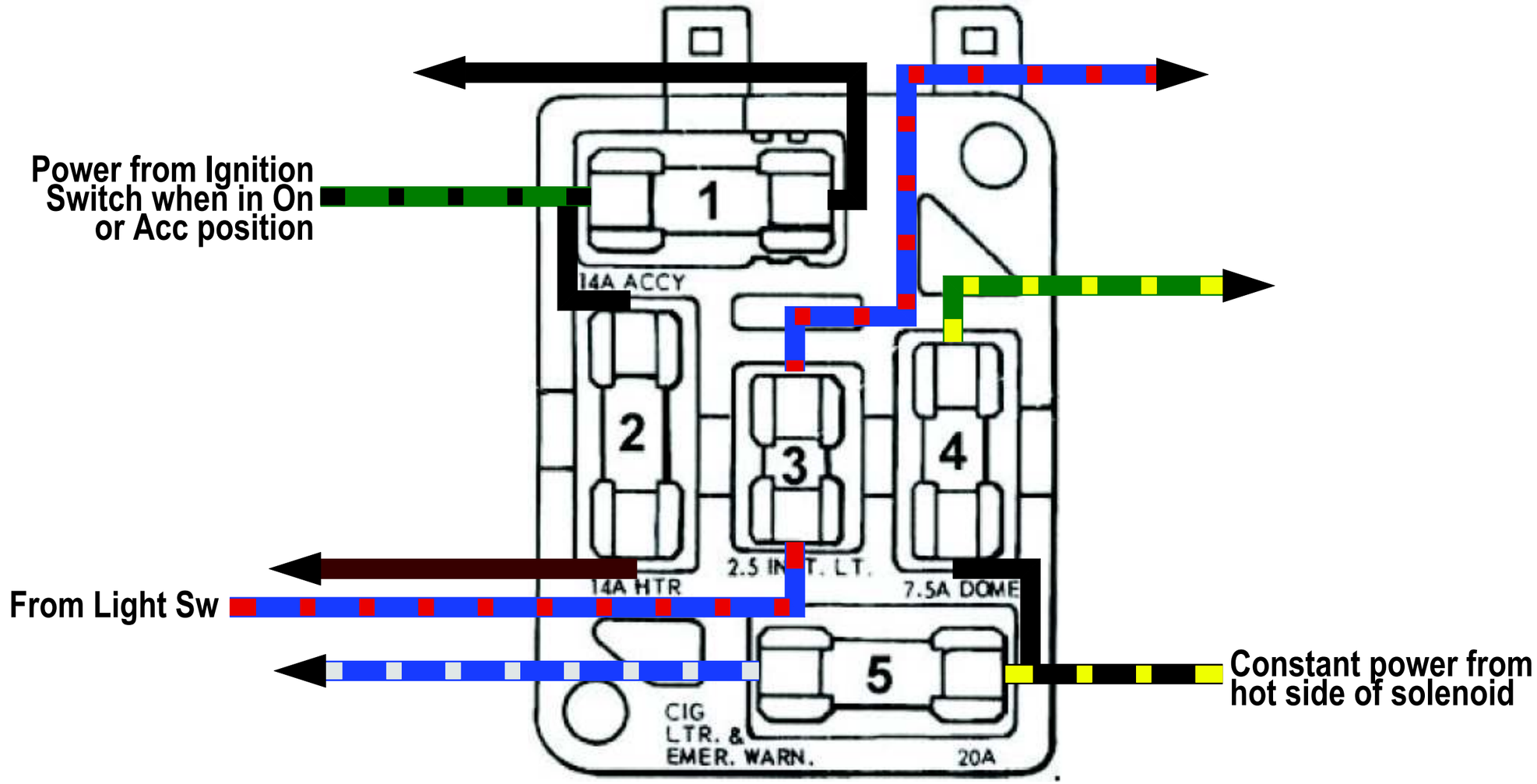

No.	A	Circuit(s) protected
1	14	Back up Lights, Radio, PRNDL Light, Turn Signal
2	14	Heater, Defroster
3	2.5	Inst. Panel, Cluster Lights, Tachometer Light, Radio Light (this circuit Is connected Into the 15 amp C.B. in the headlight switch)
4	7.5	Dome, Courtesy, Map Light, Glove Box And Luggage Compartment Lights, Clock Light, Seat Belt Warning, Door Ajar Warning
5	20	Cigarette Lighter, Emergency Warning Flasher, Back-up Light

1966 MUSTANG FUSE PANEL

Wiring Code by Number

Code	Color
2	WHITE-BLUE
3	GREEN-WHITE
4	BLUE-BLACK
5	ORANGE-BLUE
8	ORANGE-YELLOW
9	GREEN-ORANGE
10	GREEN-RED
I0A	GREEN
11	BLACK-YELLOW
12	GREEN-BLACK
13	RED-BLACK
14	BLACK
15	RED-YELLOW
16A	PINK
16	RED-GREEN
19	BLUE-BED
19	BLUE-RED
21	YELLOW
22	BLUE-BLACK
25	BLACK-ORANGE
26	BLACK-RED
28	BLACK
29	YELLOW-WHITE
30	BLACK-GREEN
31	WHITE-RED
32	RED-BLUE
34	GREEN-BLACK
35	WHITE
37	BLACK-YELLOW
39	RED-WHITE
40	BLUE-WHITE

Code	Color
42	BLUE
44	BLUE
49	WHITE-BLUE
50	GREEN-WHITE
53	BLACK-BLUE
54	GREEN-YELLOW
56	BLUE
57	BLACK
58	WHITE
61	YELLOW
63	RED
65	GREEN
77	BLUE-BLACK
95	WHITE
96	ORANGE-BLACK
122	YELLOW
123	RED
140	BLACK-RED
152	YELLOW
175	BLACK
181	BROWN
234	BLACK
262	BROWN
297	BLACK-GREEN
358	YELLOW
359	BLACK
450	GREEN
460	YELLOW
478	GRAY
482	BLUE-YELLOW
490	BLUE-RED

Code	Color
520	VIOLET
562	BROWN
648	RED
654	YELLOW
655	RED
708	BLACK
709	BLACK-GREEN
763	ORANGE-WHITE
806	WHITE
807	ORANGE
904	GREEN-RED
913	YELLOW
941	BLACK-WHITE

Wiring Code by Color

Code	Color
708 359 234 175 57 28 14	BLACK
53	BLACK-BLUE
709 297 30	BLACK-GREEN
25	BLACK-ORANGE
140 26	BLACK-RED
941	BLACK-WHITE
37 11	BLACK-YELLOW
56 44 42	BLUE
477 22	BLUE-BLACK
490 19	BLUE-RED
40	BLUE-WHITE
482	BLUE-YELLOW
262 181	BROWN
478	GRAY
450 65 I0A	GREEN
34 12	GREEN-BLACK
9	GREEN-ORANGE
904 10	GREEN-RED
50 3	GREEN-WHITE
54	GREEN-YELLOW
807	ORANGE
96	ORANGE-BLACK
5	ORANGE-BLUE
763	ORANGE-WHITE
8	ORANGE-YELLOW
16A	PINK
655 648 123 63	RED
13	RED-BLACK
32	RED-BLUE
16	RED-GREEN
39	RED-WHITE

15	RED-YELLOW
520	VIOLET
806 95 58 35	WHITE
49 2	WHITE-BLUE
31	WHITE-RED
913 654 460 358 152 122 61 21	YELLOW
137	YELLOW-BLACK
29	YELLOW-WHITE